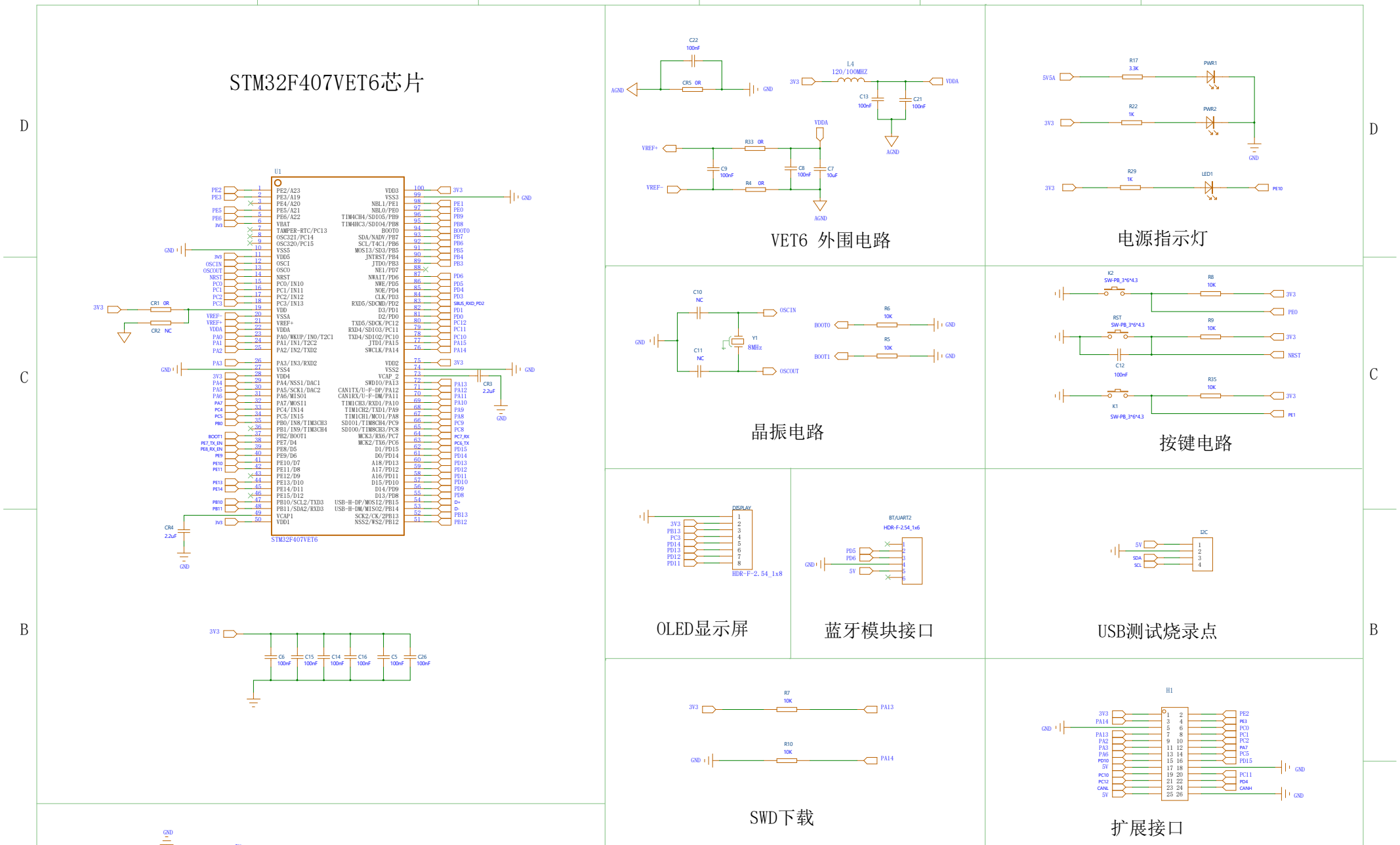
STM32F407VET6芯片
VET6 外围电路
电源指示灯
晶振电路
按键电路
OLED显示屏
蓝牙模块接口
USB测试烧录点
SWD下载
扩展接口
USB_HOST接口电路
U1
STM32F407VET6
DISPLAY
HDR-F-2.54_1x8
BT/UART2
HDR-F-2.54_1x6
I2C
H1
COMPANY:
幻尔科技有限公司
TITLE:
ROS小车驱动控制器
DRAWN:
daijun
DATED:
2023.03.12
CHECKED:
QUALITY CONTROL:
RELEASED:
CODE:
SIZE:
C
DRAWING NO:
STM32F407VET6
REV:
V1.1
SCALE:
SHEET: 1 OF 3

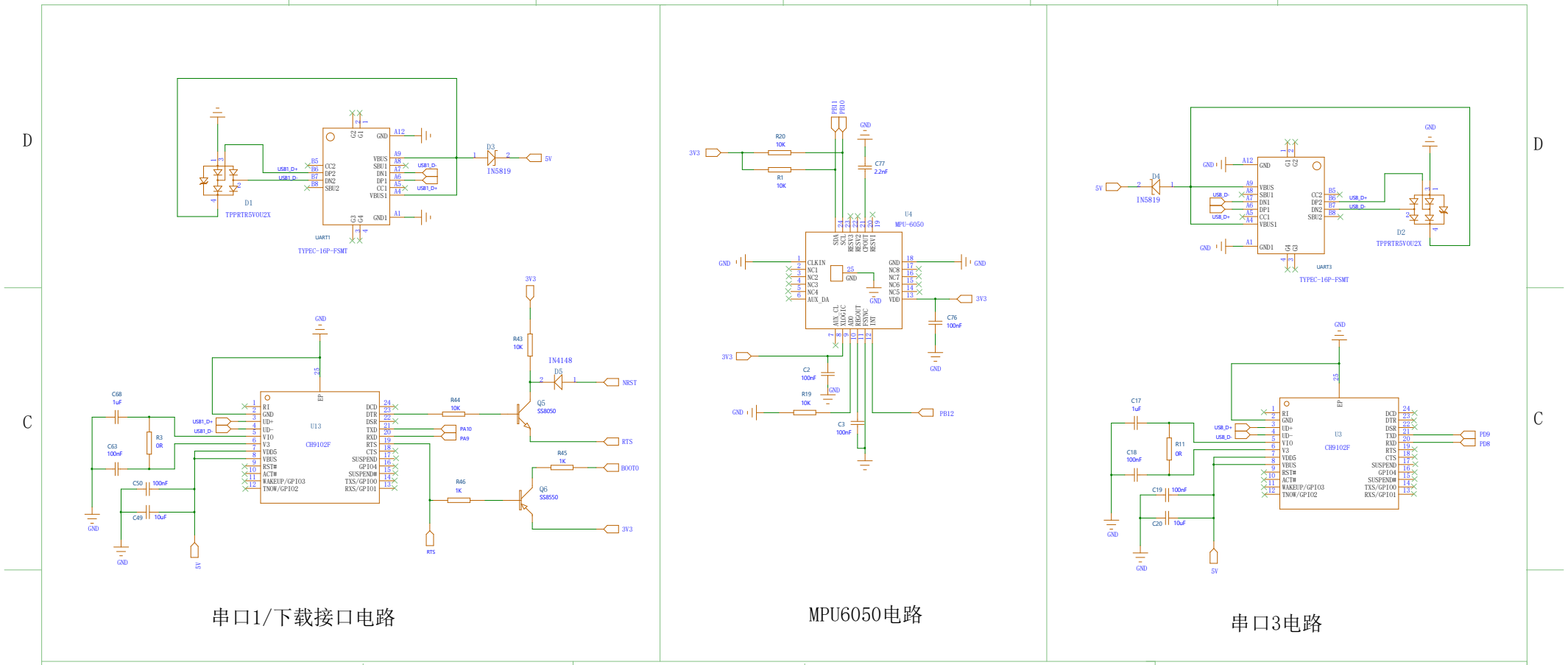

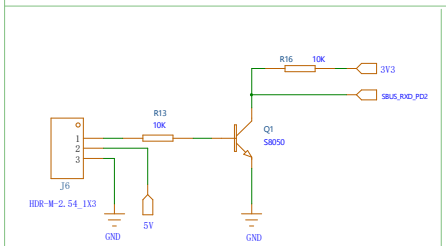

S.BUS航模遥控接口

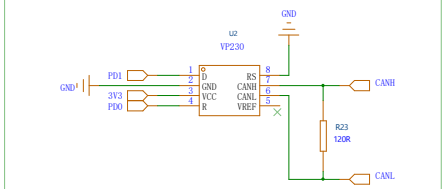

CAN 接口

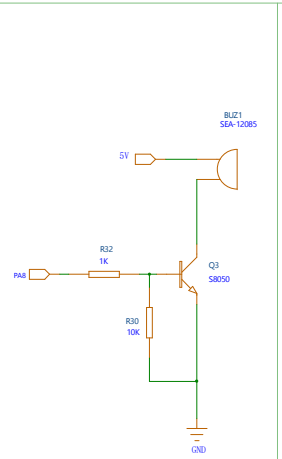

蜂鸣器

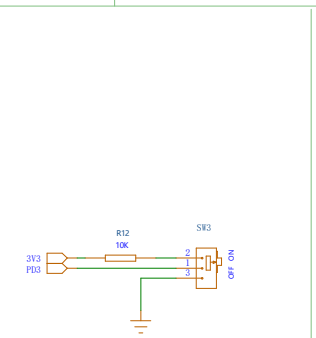

使能开关

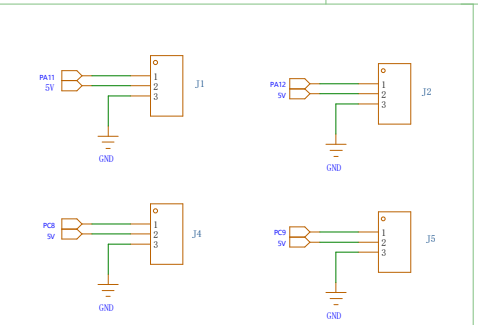

4路舵机

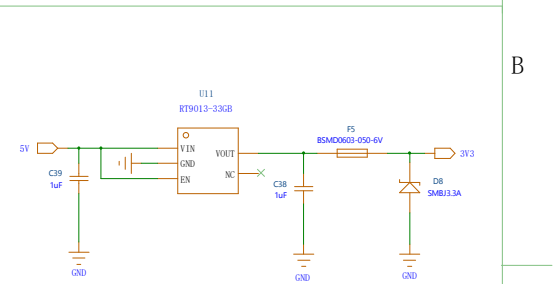

5V 转3.3V 电路

DRAWN: daijun	DATED: 2023.03.12	COMPANY: 幻尔科技有限公司	
CHECKED:	DATED:	TITLE: ROS小车驱动控制器	
QUALITY CONTROL:	DATED:	CODE:	SIZE: C
RELEASED:	DATED:	DRAWING NO: CH9102F/MPU6050	REV: V1.1
		SCALE:	SHEET: 2 OF 3

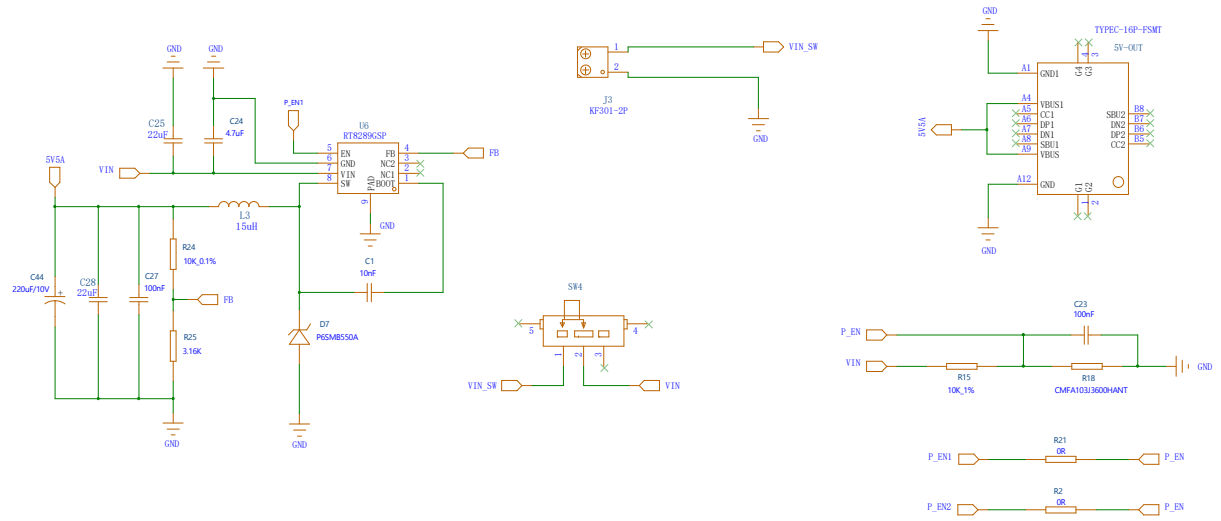

树莓派5V供电电路

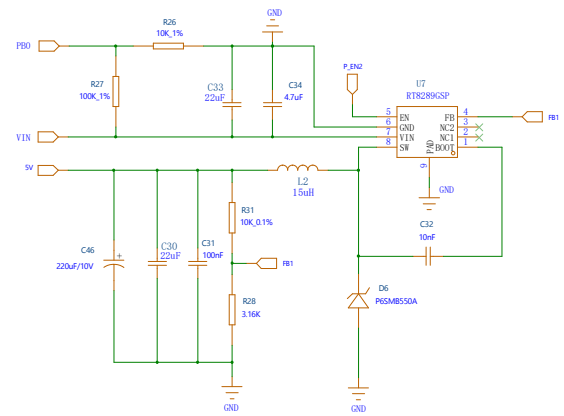

板载5V电源电路

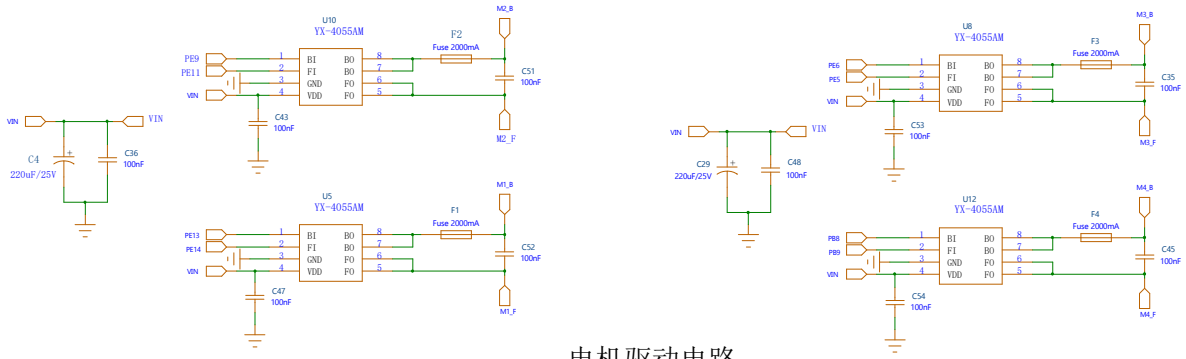

电机驱动电路

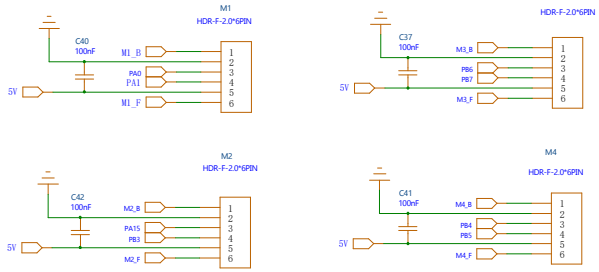

电机编码器电路

总线舵机接口电路

DRAWN: daijun	DATED: 2023.03.12	COMPANY: 幻尔科技有限公司			
CHECKED:	DATED:	TITLE: ROS小车驱动控制器			
QUALITY CONTROL:	DATED:	CODE:	SIZE: C	DRAWING NO: YX-4055AM	REV: V1.1
RELEASED:	DATED:	SCALE:		SHEET: 3 OF 3	